INSTALLATION INSTRUCTIONS

RX7 FC Z32 DUAL CALIPER BRACKET

@HeintzMFG
@HeintzMFG
sales@heintzmfg.com

Before beginning installation:

- Heintz MFG dual caliper bracket kits are designed for **OFF ROAD USE ONLY**.
- This kit is compatible with 1986-1992 Mazda RX7 FC with 5 lug hubs, Parts Shop Max (PBM) Z32 calipers, and OEM RX7 FD 294mm rotors.

Foot Brake Caliper Bracket Installation Instructions:

STEP	INSTRUCTIONS
1	Remove rear knuckle and factory dust shield.
2	Install the provided 3d printed hub ring onto the knuckle and mark a cut line on the face of the hub. Using a flap disc or belt grinder, remove material up to the cut line in order to allow the RX7 FD rotor to fit over the RX7 FC hub.
3	Install the 3d printed knuckle cut fixture into the OEM upper caliper mounting hole and mark a cut line. Use a reciprocating saw and/or grinder to remove the OEM upper caliper mount on the knuckle. Test fit the foot brake caliper bracket and ensure that there is no material keeping the caliper bracket from sitting flush against the hub mounting face.
4	Install foot brake bracket and torque the M8 fasteners to 28 ft lbs using blue Loctite on the threads. Failure to properly torque these bolts and ensure they remain tight during operation may result in bolt shear or bolt hole tear-out on the bracket.
	Install Z32 caliper on foot brake caliper bracket and torque to 60 ft lb.

Handbrake Caliper Bracket Installation Instructions:

STEP	INSTRUCTIONS
1	Remove rear knuckle and factory dust shield.
2	Install the provided 3d printed hub ring onto the knuckle and mark a cut line on the face of the hub. Using a flap disc or belt grinder, remove material up to the cut line in order to allow the RX7 FD rotor to fit over the RX7 FC hub.
3	Install handbrake caliper bracket and torque the M8 fasteners to 28 ft lbs using blue Loctite on the threads. Failure to properly torque these bolts and ensure they remain tight during operation may result in bolt shear or bolt hole tear-out on the bracket.
4	Install Z32 caliper on handbrake caliper bracket and torque to 60 ft lb.

DISCLAIMER:

The person that is purchasing this product makes the following representations and acknowledges and agrees to the following terms and conditions: This off-road race only product ("this Product") is designed and intended for use in organized, amateur and professional racing events, but is limited to closed-course racing and open-course racing that is formally sanctioned by a recognized racing organization involving the motor vehicle in which it is installed (the "Vehicle"). It is not for use on public highways or roads. The person or entity buying this Product and/or using this Product (the "user") agrees to use the Vehicle solely for competition uses as described herein, and the User acknowledges that the purchase, installation and use of this Product all comply with federal, state and local laws, rules, regulations and ordinances by the User.

The User accepting this disclaimer acknowledges and hereby indemnifies and saves harmless Late Model Restoration, its officers, employees, agents, distributors and dealers for any damages, penalties, fines, expenses or other costs which may arise from the use of this Product and without limiting the generality of the foregoing specifically acknowledges the following: Use of this Product for purposes other than solely for competition is a violation of federal law and may violate applicable state or local environmental, motor vehicle and other laws. That use of this Product may violate warranties from the manufacturer of the Vehicle or from others. That the installation of this Product, improper installation of this Product, use of this Product with other components or failure to use this Product in conjunction with other components, could result in or cause personal injury, property damage or death.

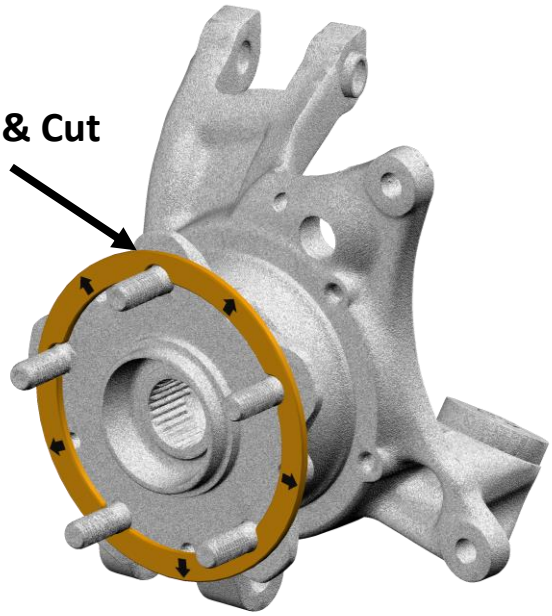

- **Install the provided 3d printed hub ring onto the knuckle and mark a cut line on the face of the hub. Using a flap disc or belt grinder, remove material up to the cut line in order to allow the RX7 FD rotor to fit over the RX7 FC hub.**

- **Install the 3d printed knuckle cut fixture as shown and mark a cut line. Use a reciprocating saw and/or grinder to remove the OEM upper caliper mount on the knuckle. Test fit the foot brake caliper bracket and ensure that there is no material keeping the caliper bracket from sitting flush against the hub mounting face.**

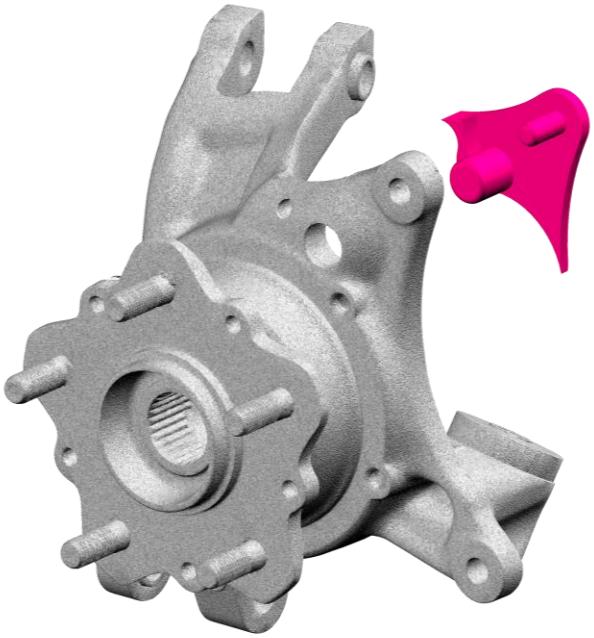

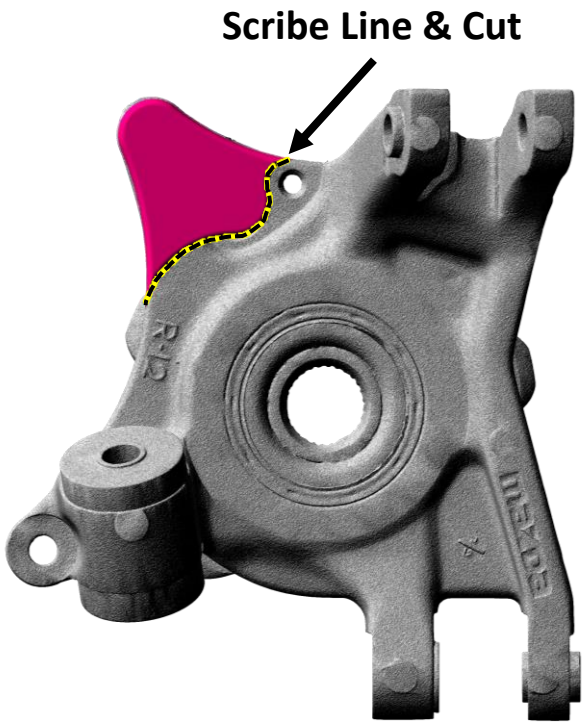

(Passenger Side Shown)

- **Install foot brake bracket and torque the M8 fasteners to 28 ft lbs using blue Loctite (included) on the threads. Install Z32 caliper on foot brake caliper bracket and torque to 60 ft lb.**

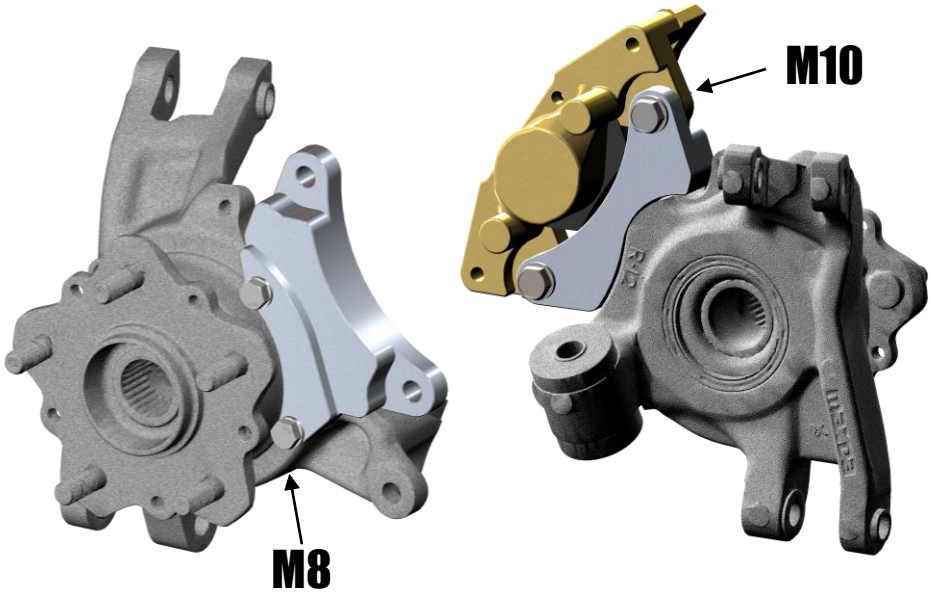

- **Install handbrake caliper bracket and torque the M8 fasteners to 28 ft lbs using blue Loctite (included) on the threads. Install Z32 caliper on handbrake caliper bracket and torque to 60 ft lb.**

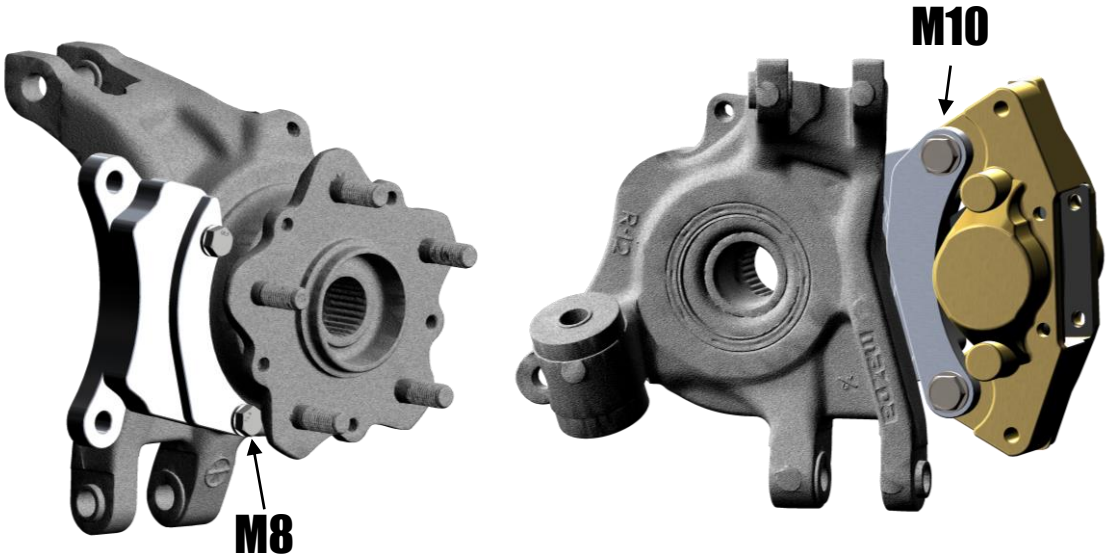

The hydraulic handbrake bracket experiences a significant amount of force under full lock. Failure to properly torque these bolts and ensure they remain tight during operation may result in bolt hole tear-out on the bracket. Make this a part of your routine pre drift event bolt check!